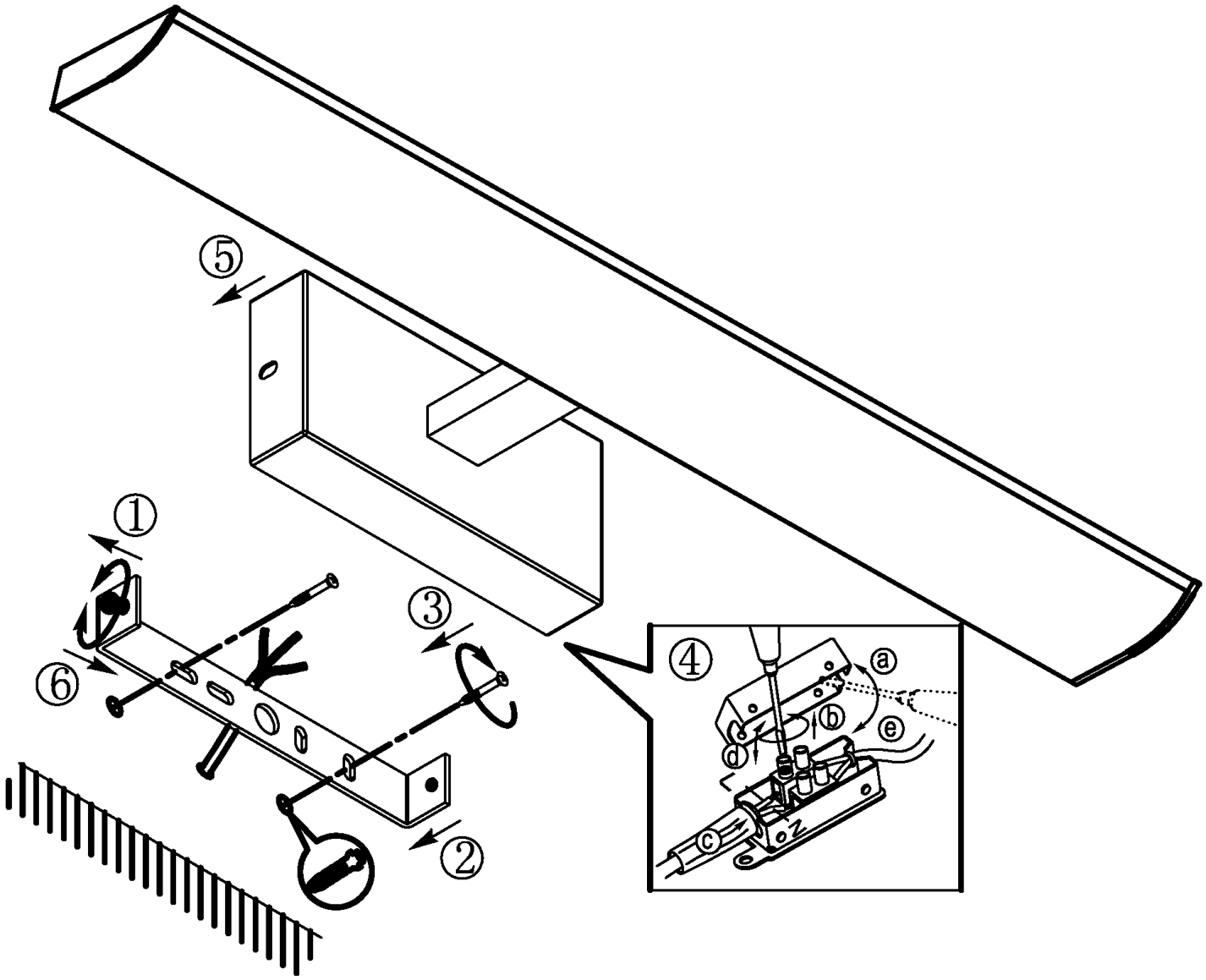

BLA94612