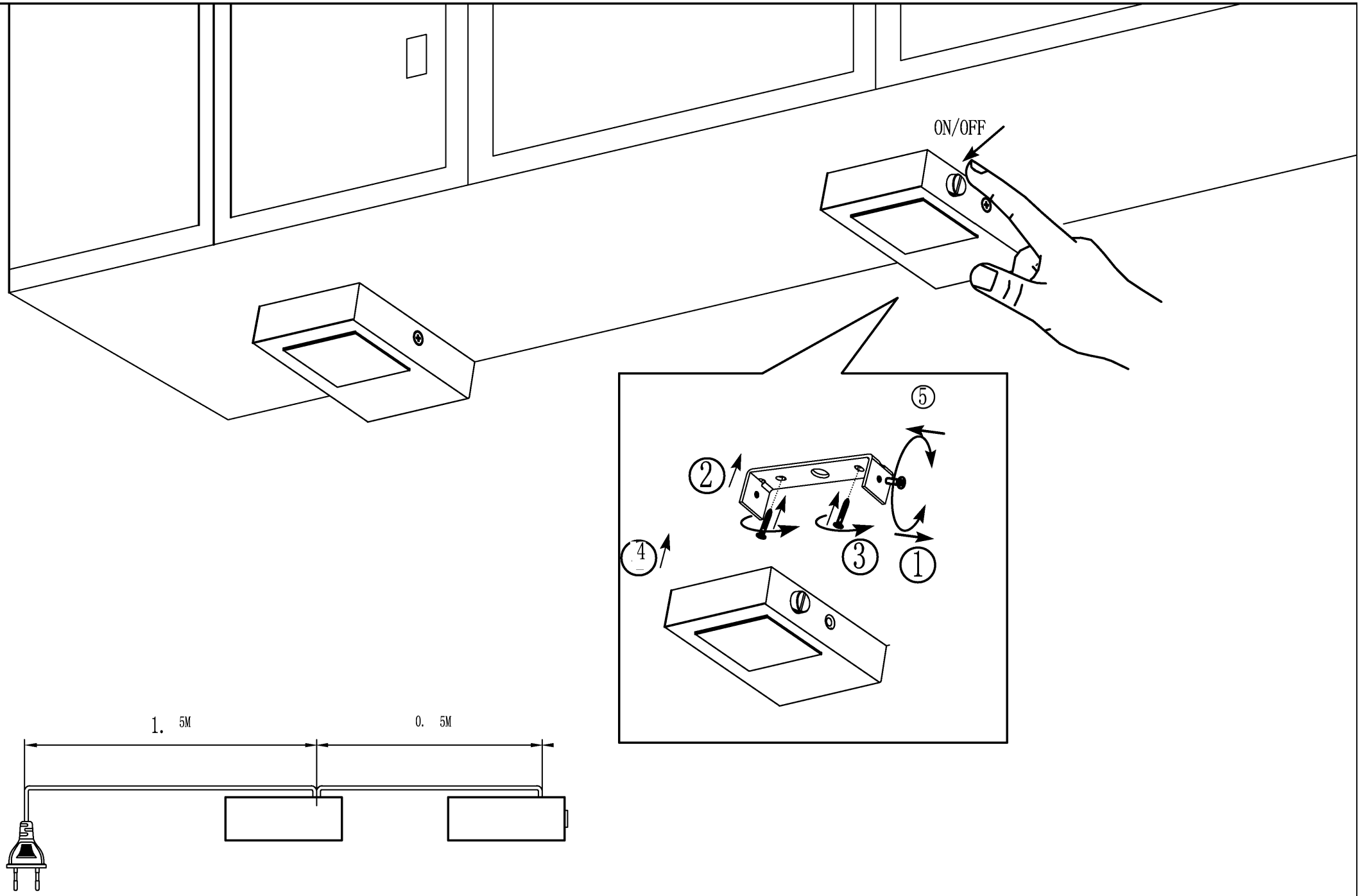

BLA9 4516