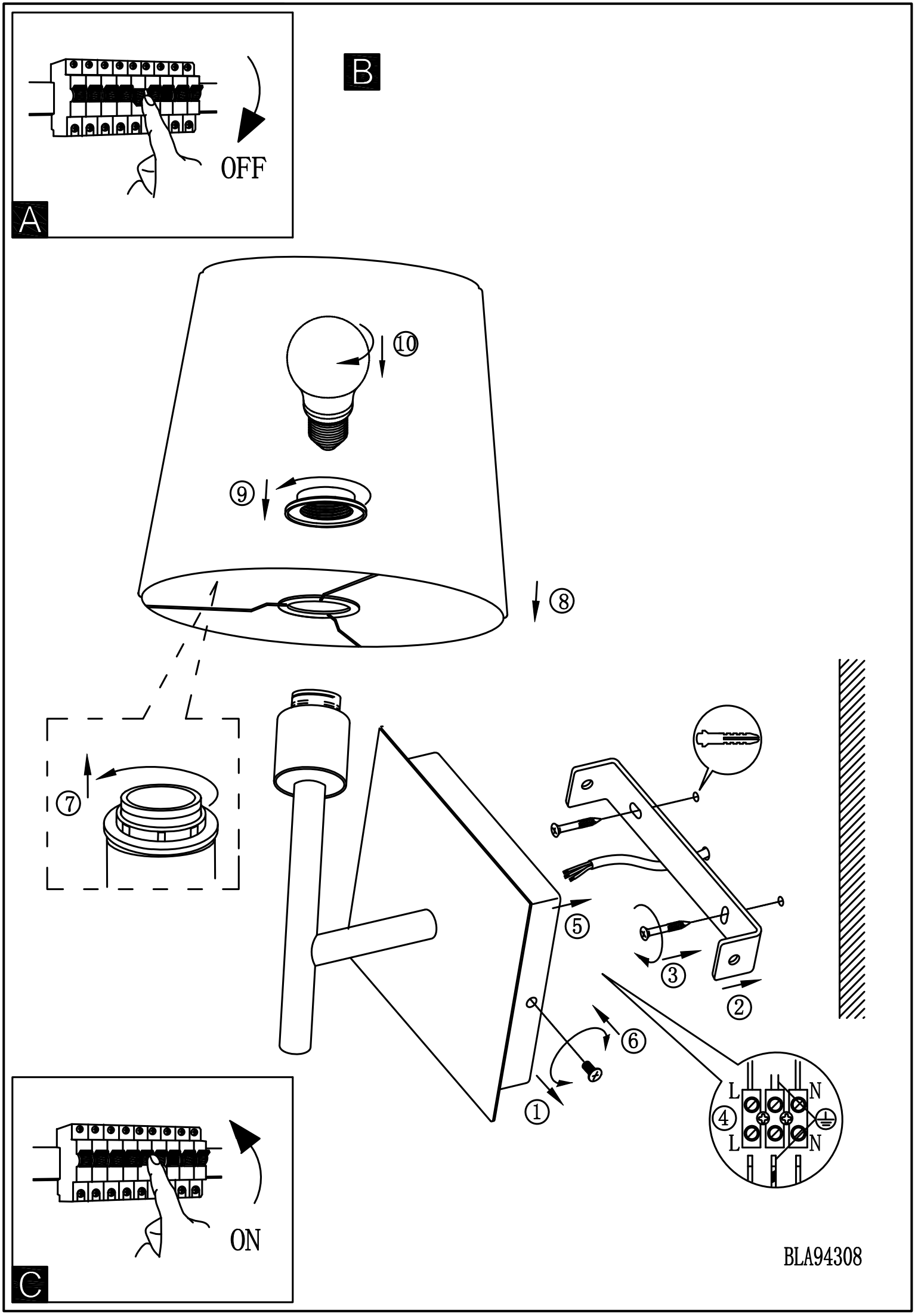
A
OFF
B
⑩
⑨
⑧
⑦
⑤
③
②
⑥
①
④
L
N
L
N
C
ON
BLA94308